Power and Spares
File: power.kicad_sch

Master Control
File: bcontroller.kicad_sch

PCI Bus
File: pcibus.kicad_sch

ATA Interface
File: IDE.kicad_sch

Agnus Multiadapter
File: Agnus-Multi.kicad_sch

HID and User Ports
File: hid.kicad_sch

Chip RAM Controller
File: cpu.kicad_sch

Audio
File: audio.kicad_sch

PCI Bridge
File: pci-bridge.kicad_sch

Video
File: video.kicad_sch

Motorola Bus Logic
File: motorola_bus_logic.kicad_sch

Chip Memory
File: chip_memory.kicad_sch

Serial
File: serial.kicad_sch

Clocks, ROM, USB
File: clocks.kicad_sch

Floppy and Parallel
File: floppy.kicad_sch

PCI Bus Logic
File: pci_bus_logic.kicad_sch

100 = PCI BUS
200 = CHIPSET
300 = VIDEO
500 = AUDIO
600 = POWER
700 = CHIPSET RAM
800 = VOLTAGE SHIFTER
900 = ATA

BUDDY

DESIGNED WITH KiCAD REV 8

Sheet: /
File: AmigaPCI Mainboard.kicad_sch

Title: AMIGA PCI

Size: USLedger	Date: 2026-04-27	Rev: 7.0
KiCad E.D.A. 8.0.9		Id: 1/17

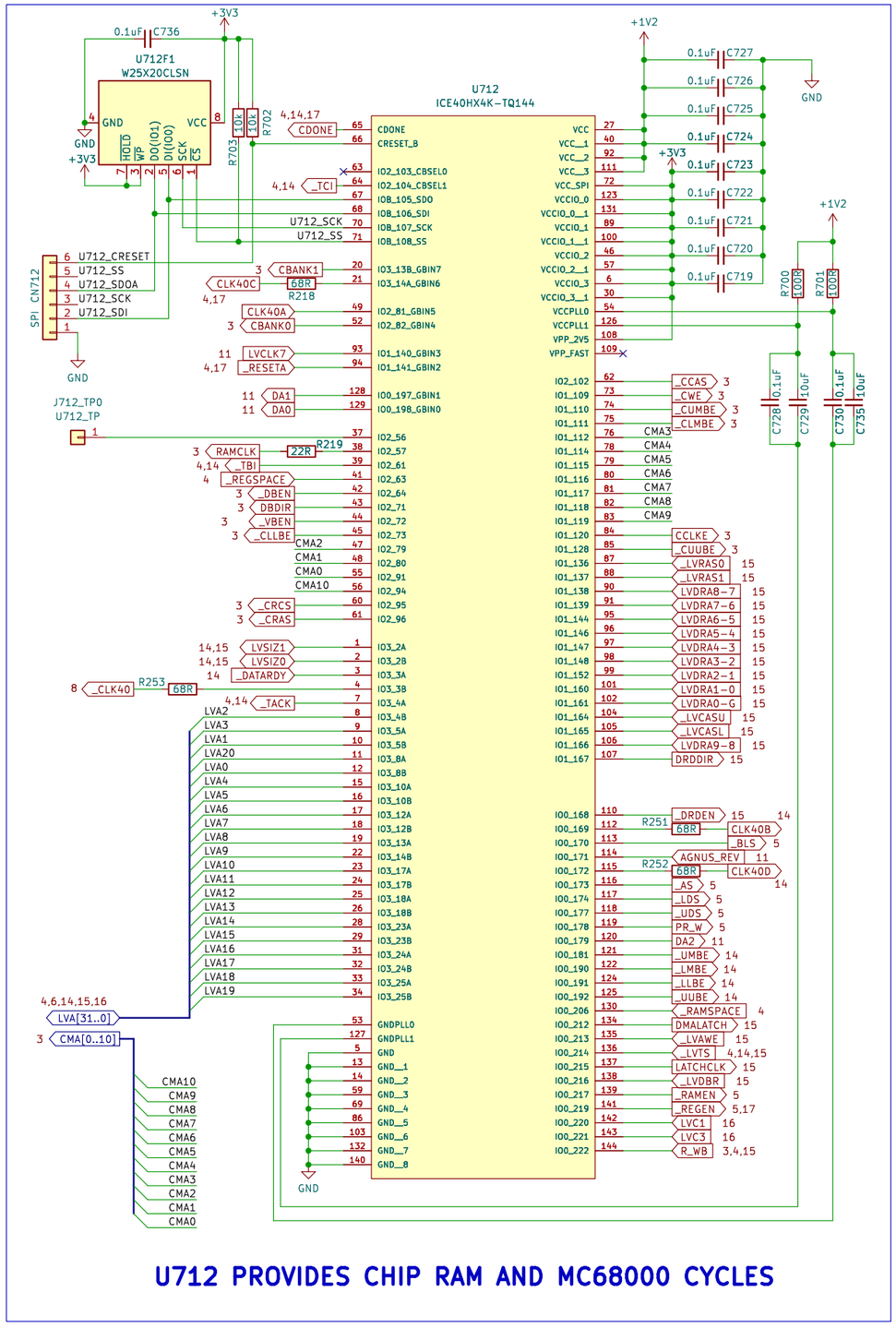

U712 PROVIDES CHIP RAM AND MC68000 CYCLES

CPU LOCAL BUS PORT

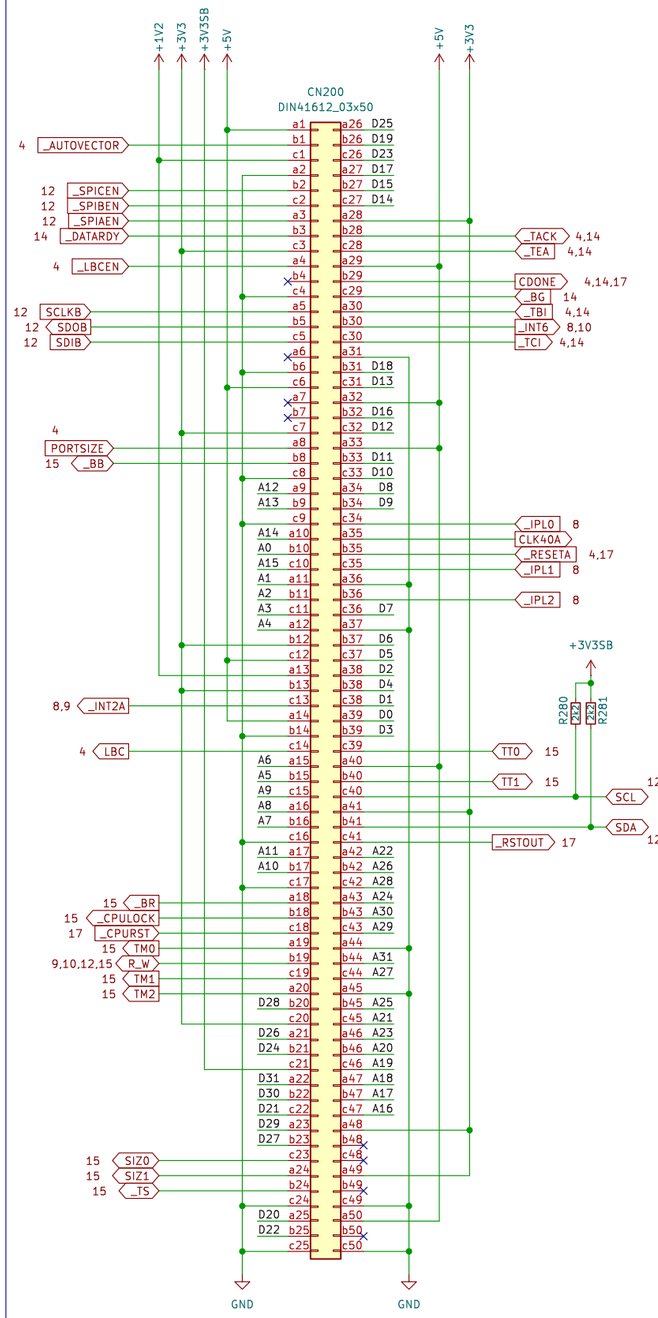

PULLUPS

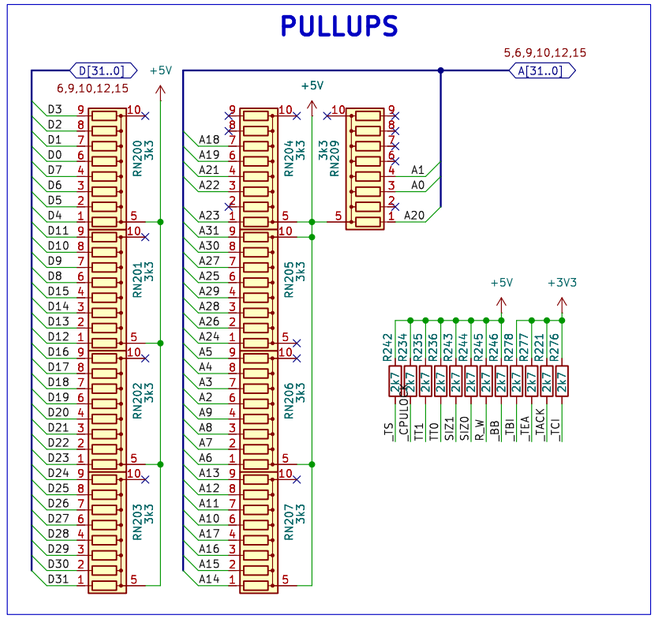

FPGA PROGRAM

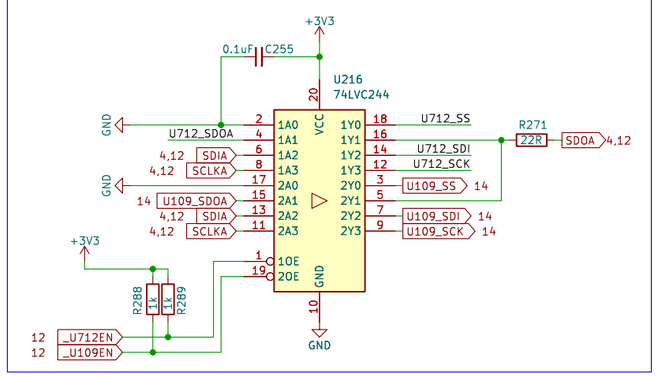

CHIP RAM CONTROLLER

Sheet: /Chip RAM Controller/
File: cpu.kicad_sch

Title: AMIGA PCI

Size: B	Date: 2026-04-27	Rev: 7.0
KiCad E.D.A. 8.0.9		Id: 2/17

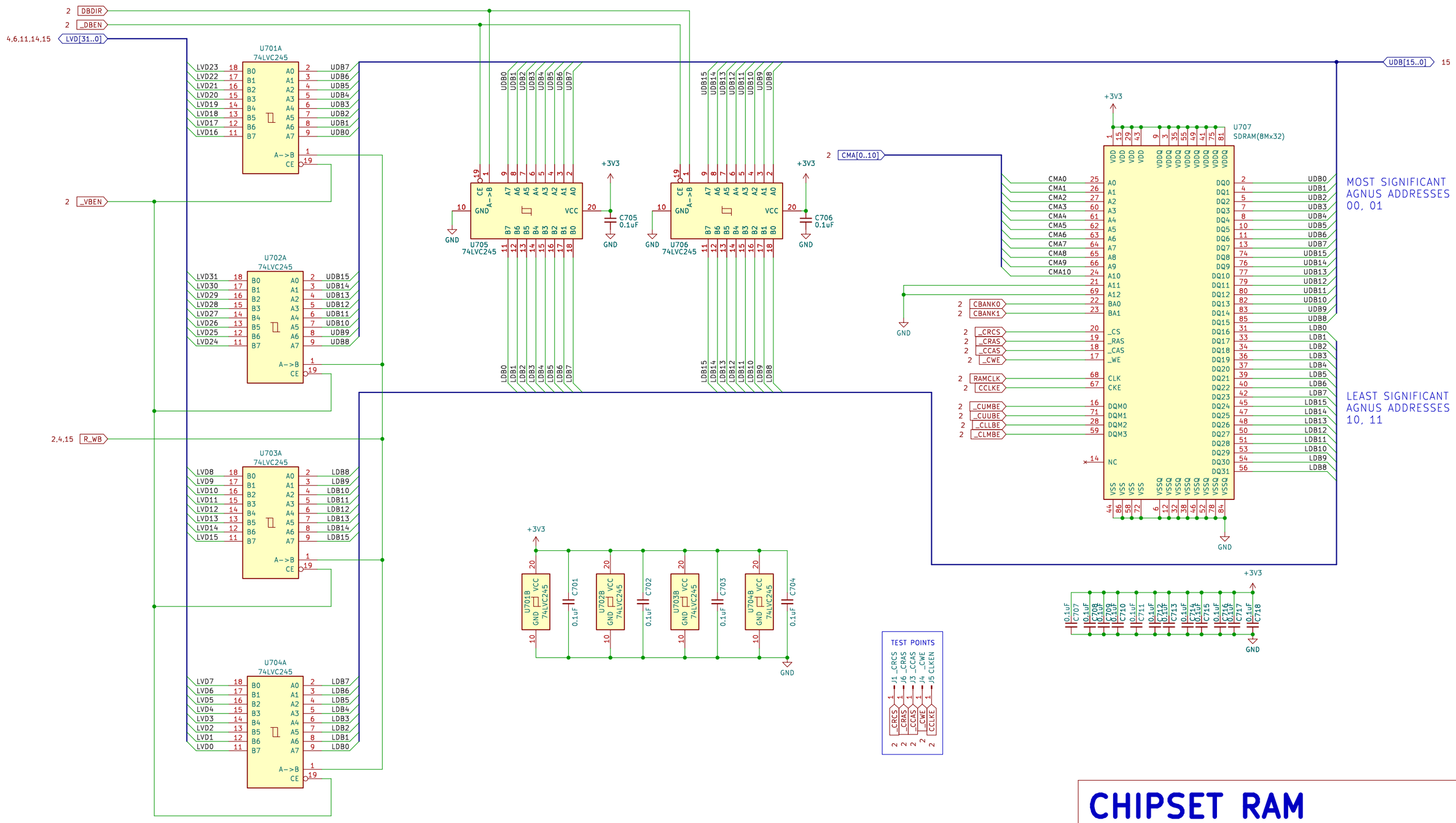

U701–U704 ISOLATE THE CHIP RAM FROM THE CPU DURING CHIP RAM DMA CYCLES.

CHIPSET RAM

Sheet: /Chip Memory/
File: chip_memory.kicad_sch

Title: AMIGA PCI

Size: B	Date: 2026-04-27	Rev: 7.0
KiCad E.D.A. 8.0.9		Id: 3/17

MASTER OF PUPPETS

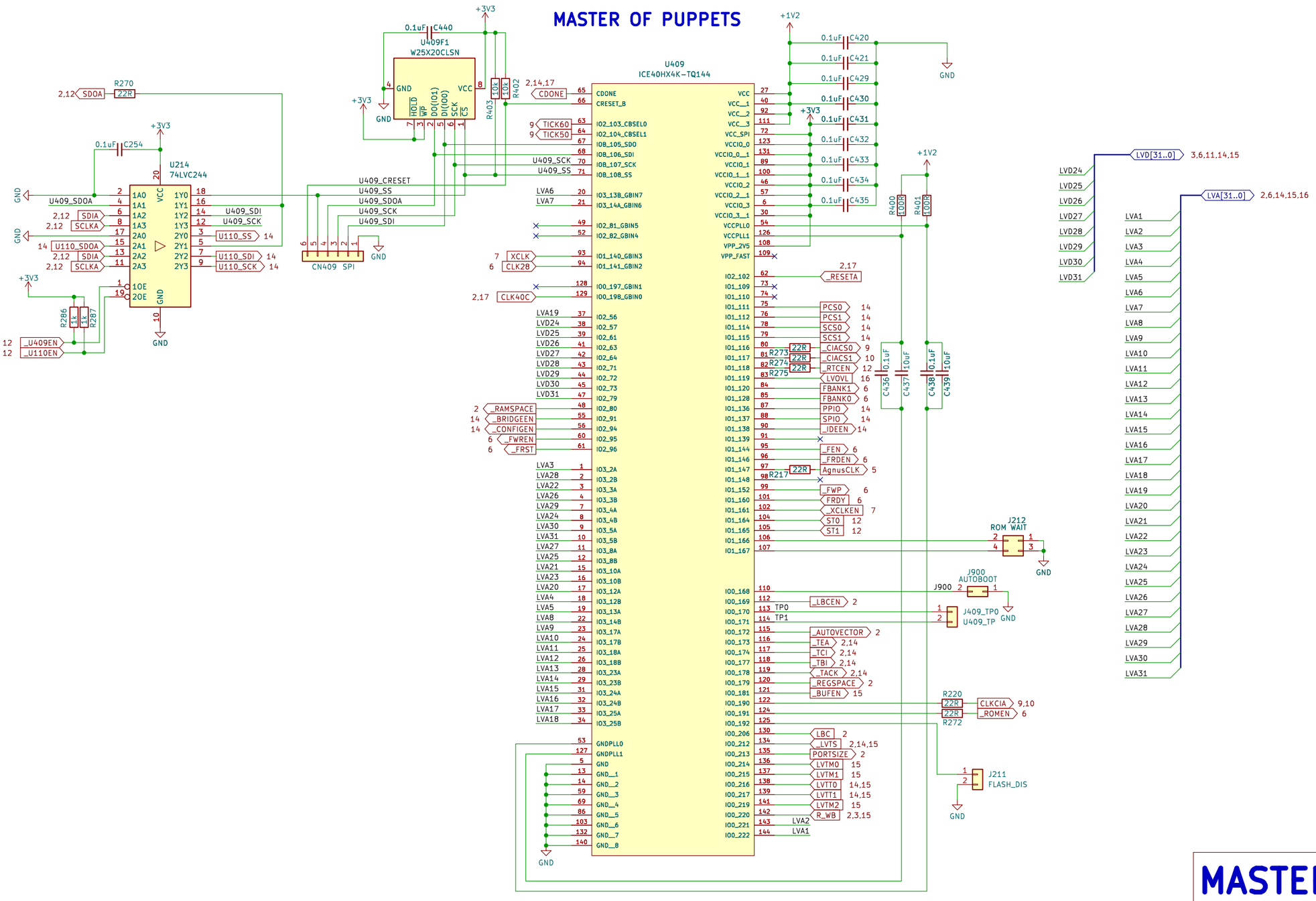

U409 PROVIDES ADDRESS DECODES, CHIP SELECTS, AND REPLACEMENT GARY FUNCTIONS

MASTER CONTROL

Sheet: /Master Control/
File: bcontroller.kicad_sch

Title: AMIGA PCI

Size: B	Date: 2026-04-27	**Rev: 7.0**
KiCad E.D.A. 8.0.9		Id: 4/17

SUPPORTS 8372A (ALL PART NUMBERS)
AND 8375 THE FOLLOWING PART NUMBERS:
390544-01 AND COMPATIBLE (390544-02, 390554-01, 390554-02,
318069-12, 318069-13) AND 318069-10, 318069-11

JUMPERS MUST BE CONFIGURED BY AGNUS PART NUMBER

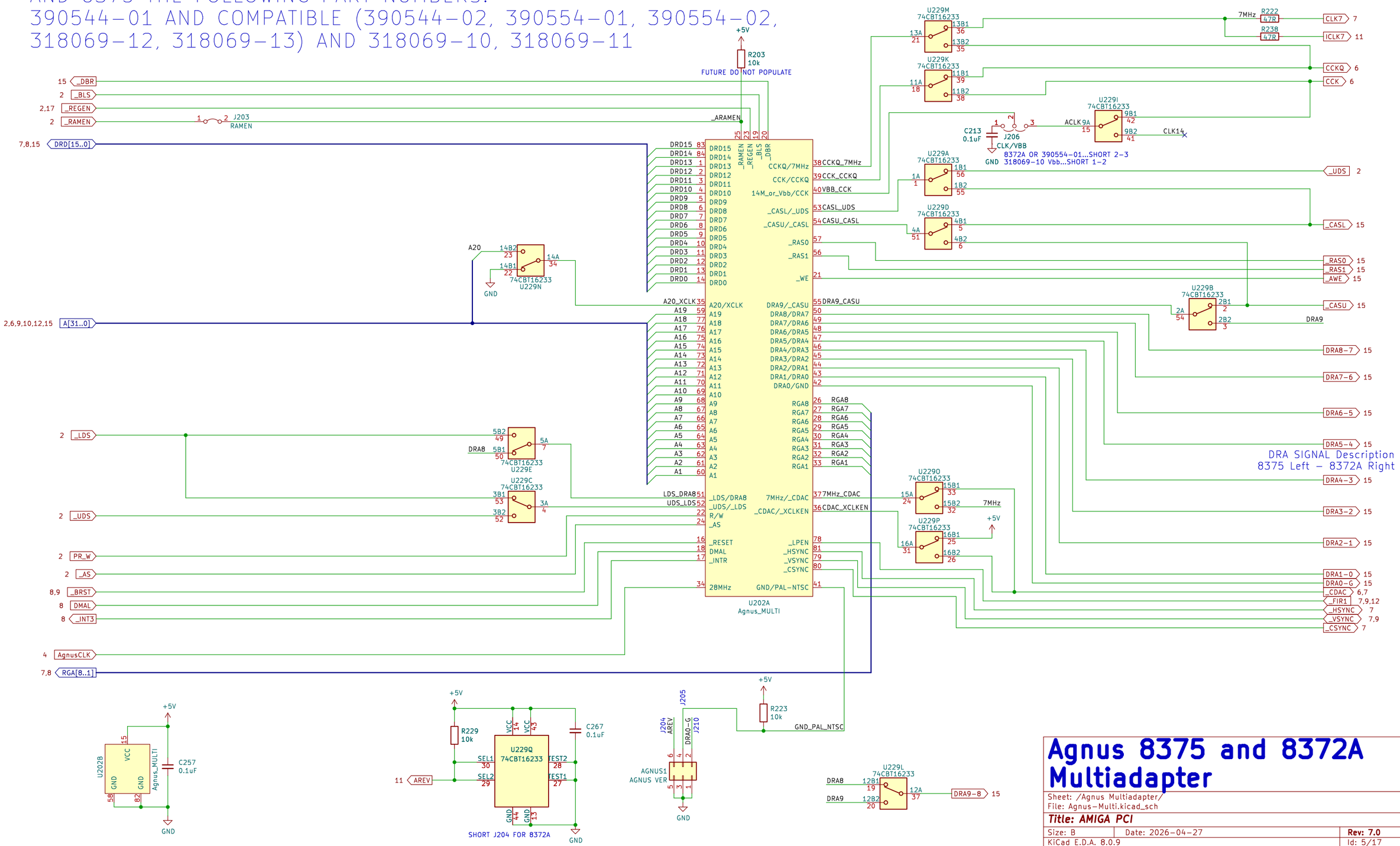

Agnus 8375 and 8372A Multiadapter

Sheet: /Agnus Multiadapter/
File: Agnus-Multi.kicad_sch

Title: AMIGA PCI

Size: B	Date: 2026-04-27	Rev: 7.0
KiCad E.D.A. 8.0.9		Id: 5/17

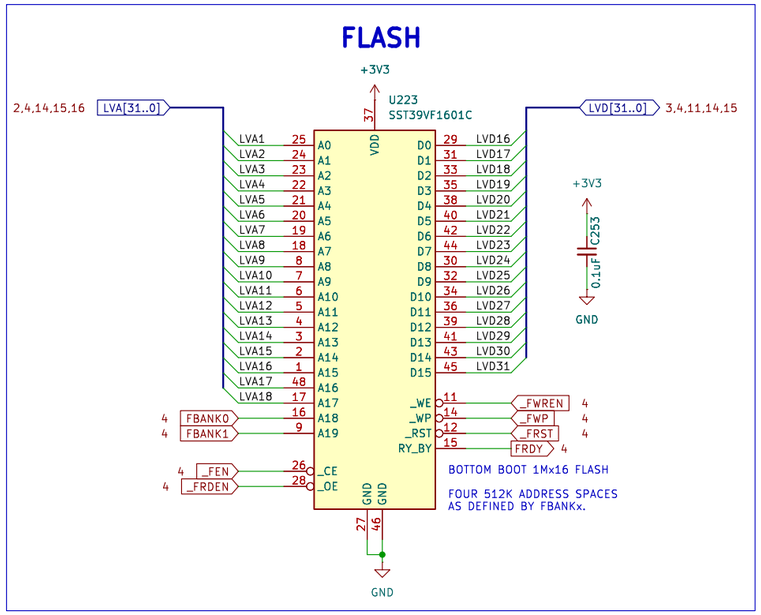

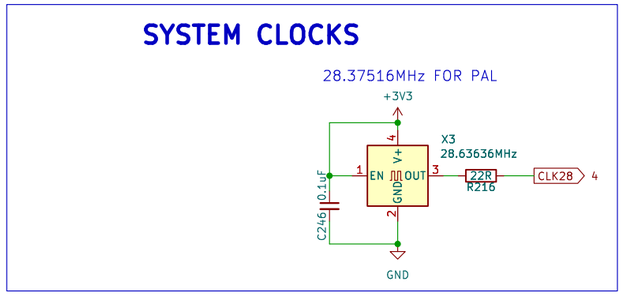

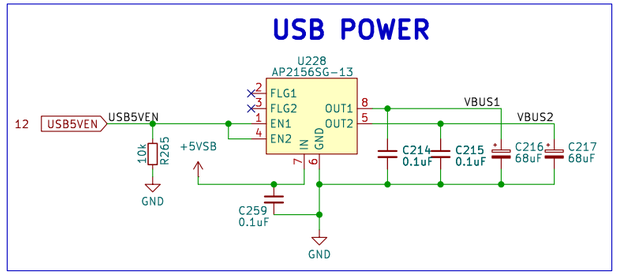

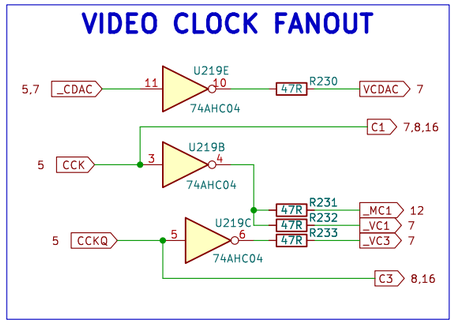

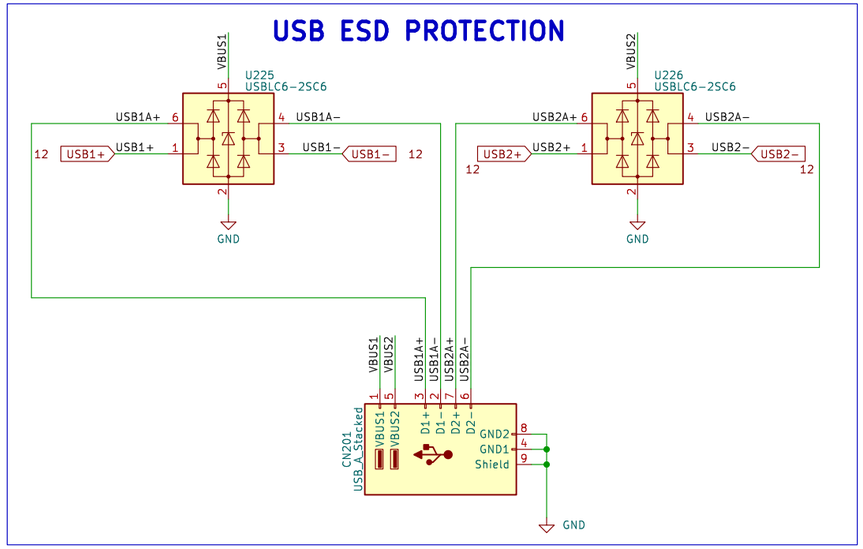

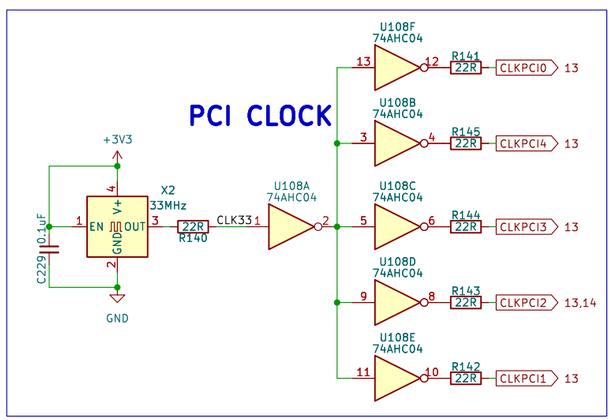

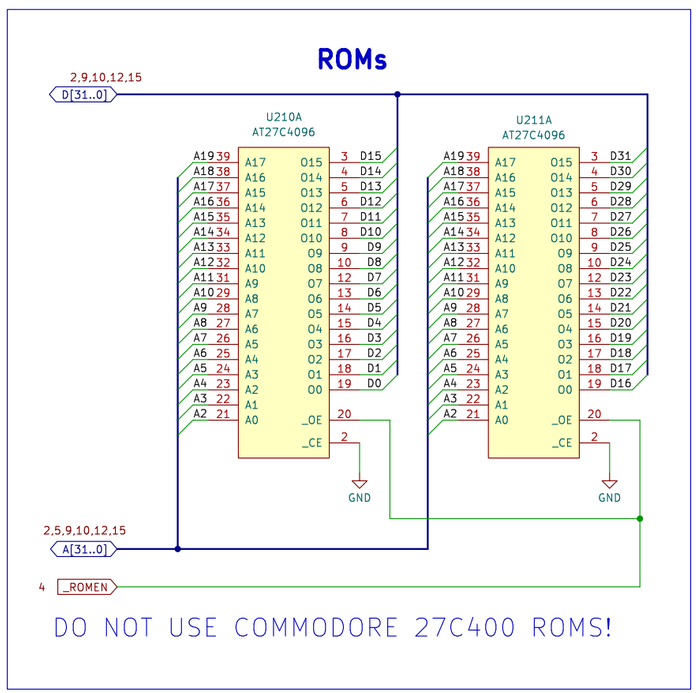

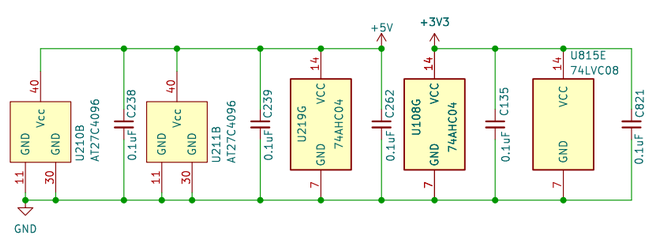

CLOCKS, ROM, USB

Sheet: /Clocks, ROM, USB/
File: clocks.kicad_sch

Title: AMIGA PCI

Size: B	Date: 2026-04-27	Rev: 7.0
KiCad E.D.A. 8.0.9		Id: 6/17

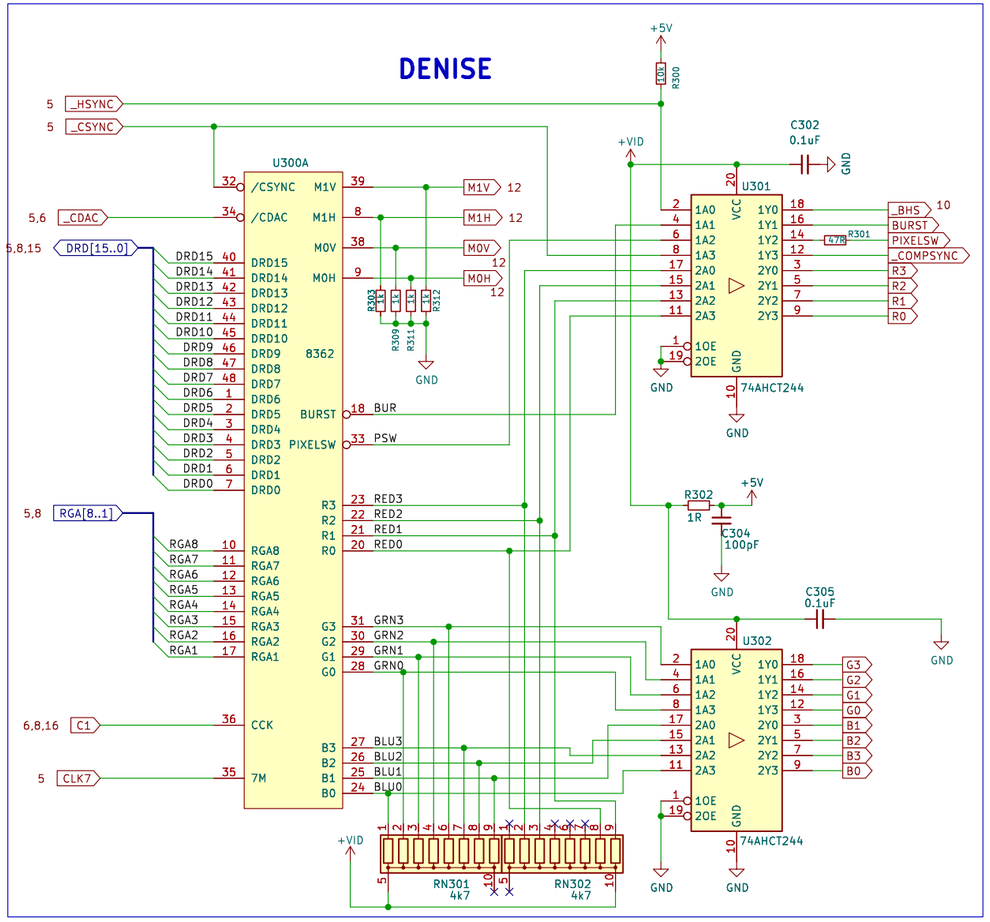

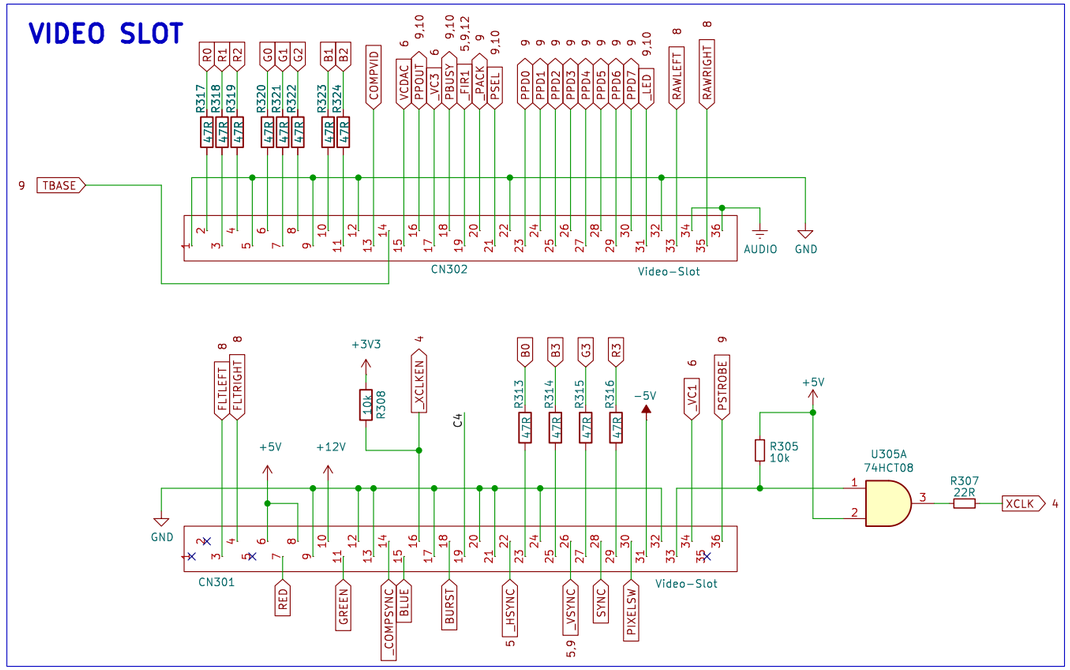

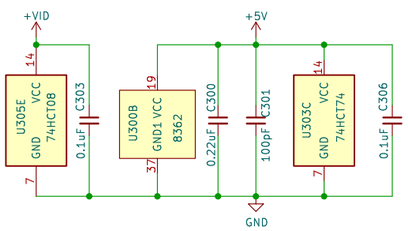

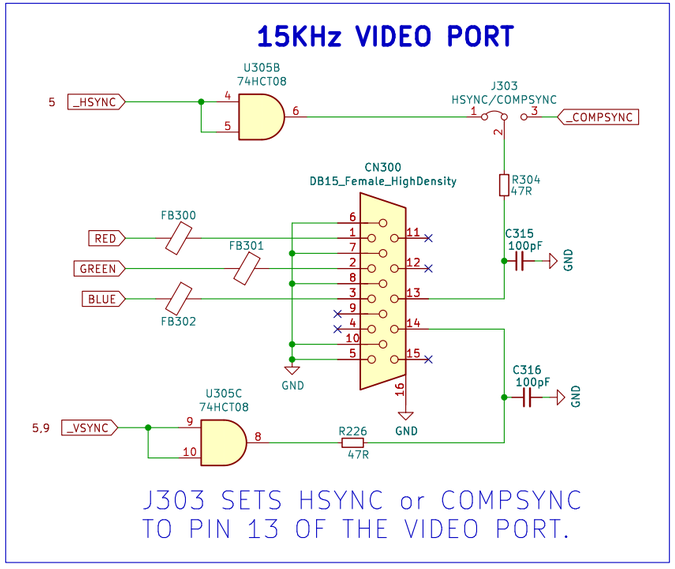

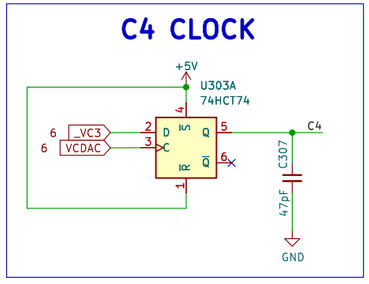

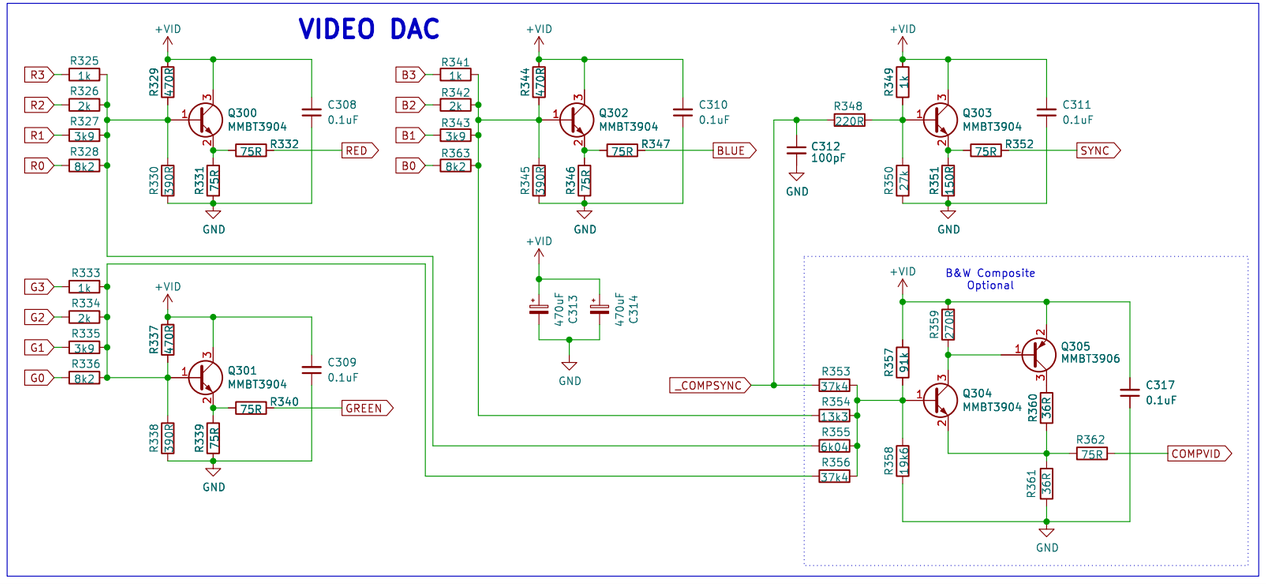

VIDEO

Sheet: /Video/
File: video.kicad_sch

Title: AMIGA PCI

Size: B	Date: 2026-04-27	Rev: 7.0
KiCad E.D.A. 8.0.9		Id: 7/17

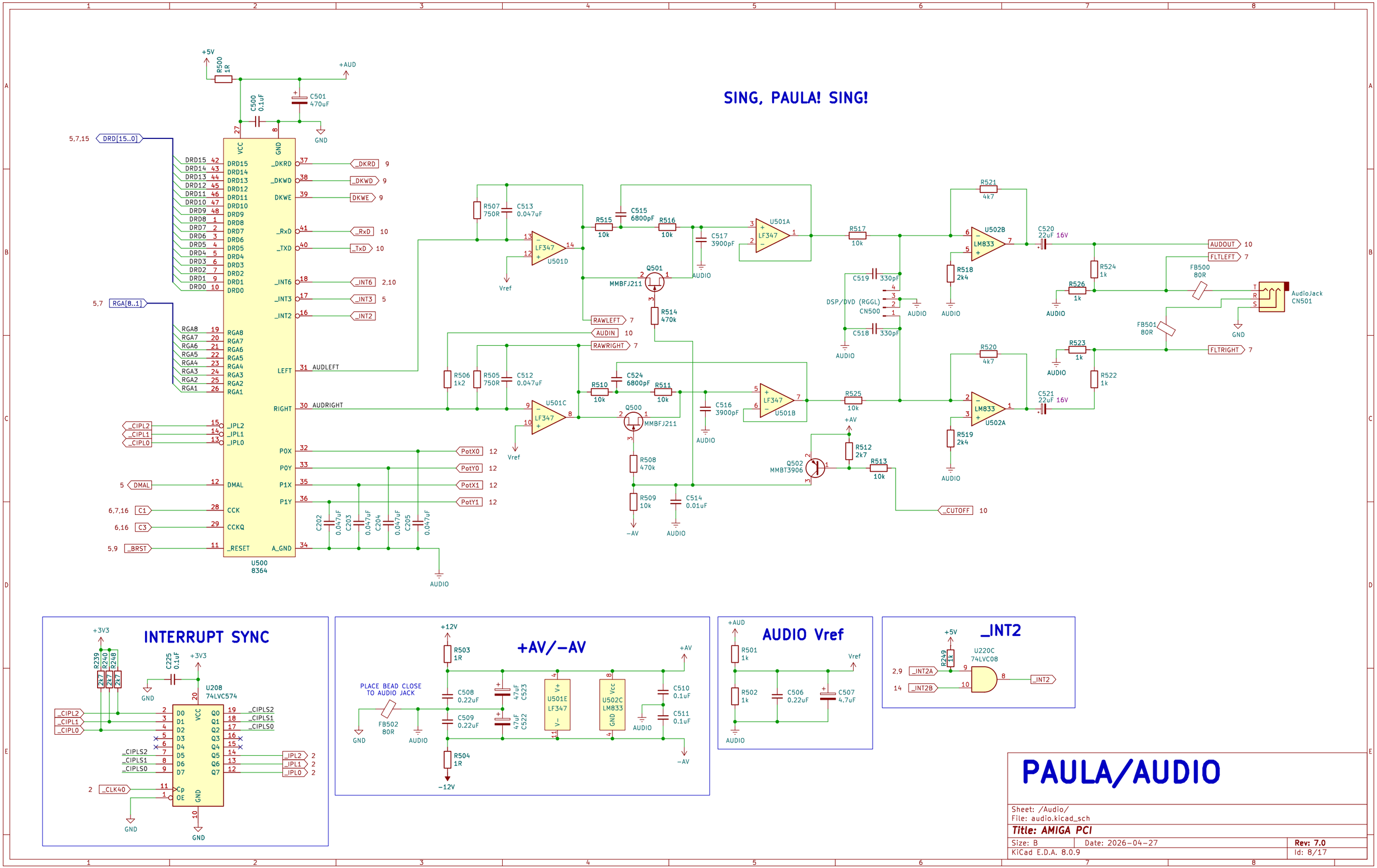
SING, PAULA! SING!
U500
8364
U501D
U501C
U501A
U501B
U501E
U502B
U502A
U502C
Q501
Q500
Q502
MMBFJ211
MMBT3906
CN500
CN501
AudioJack
INTERRUPT SYNC
U208
74LVC574
+AV/−AV
AUDIO Vref
_INT2
U220C
74LVC08
PAULA/AUDIO
Sheet: /Audio/
File: audio.kicad_sch
Title: AMIGA PCI
Size: B
Date: 2026-04-27
Rev: 7.0
KiCad E.D.A. 8.0.9
Id: 8/17

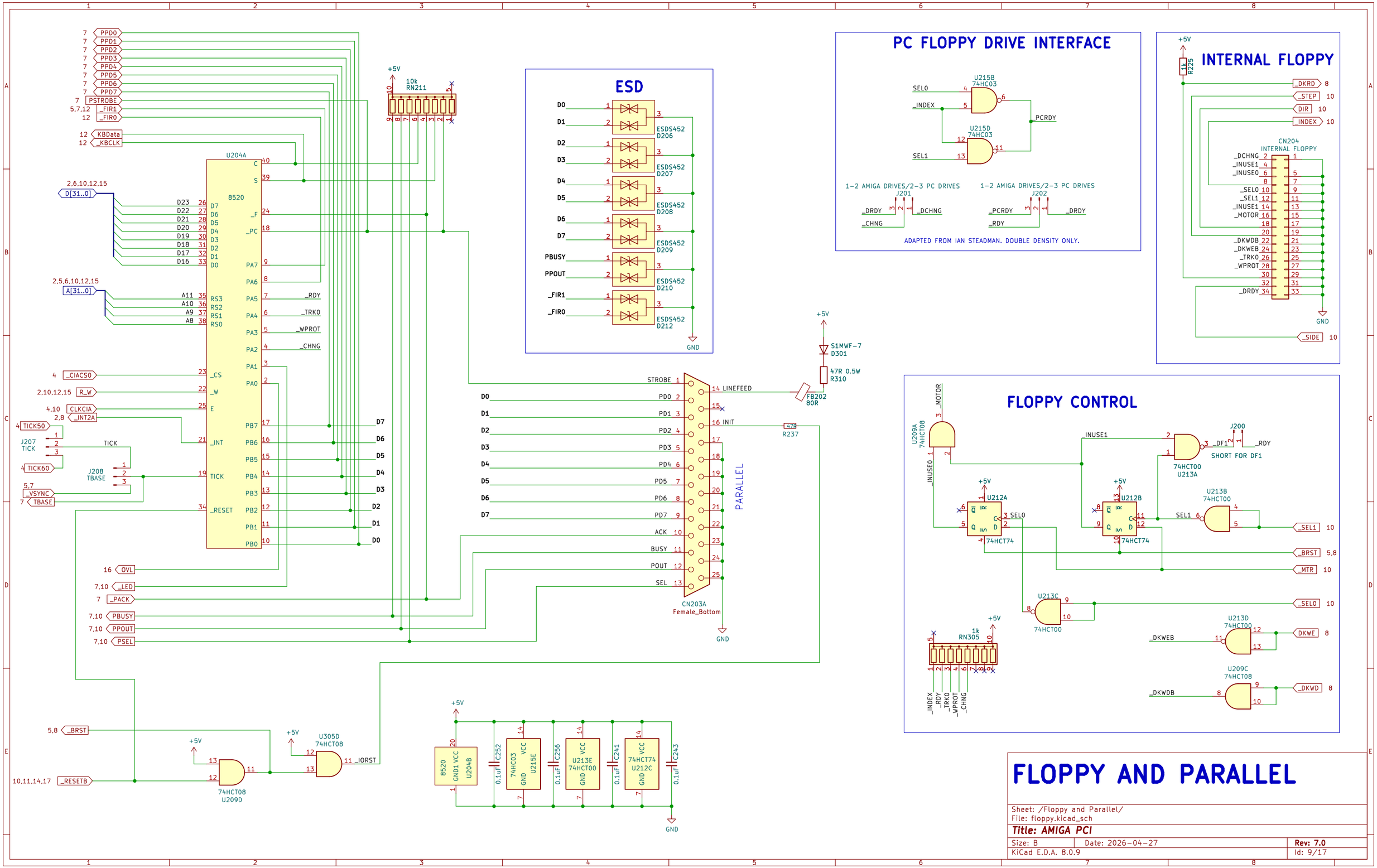

FLOPPY AND PARALLEL

Sheet: /Floppy and Parallel/
File: floppy.kicad_sch

Title: AMIGA PCI

Size: B	Date: 2026-04-27	Rev: 7.0
KiCad E.D.A. 8.0.9		Id: 9/17

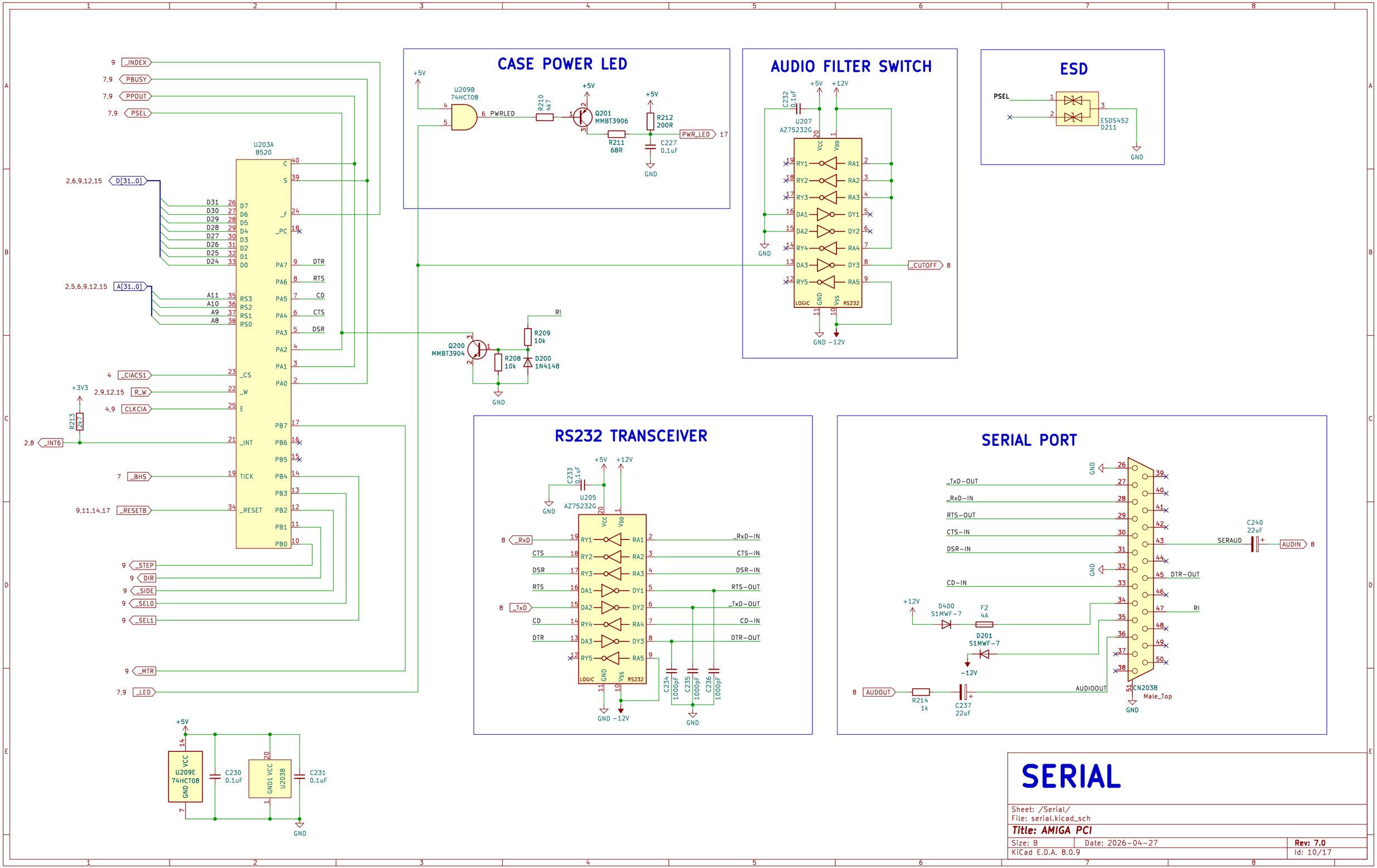
CASE POWER LED
U209B
74HCT08
PWRLED
R210
4k7
Q201
MMBT3906
R211
68R
R212
200R
C227
0.1uF
PWR_LED
AUDIO FILTER SWITCH
C232
0.1uF
U207
AZ75232G
_CUTOFF
ESD
PSEL
ESDS452
D211
U203A
8520
D[31..0]
A[31..0]
_INDEX
PBUSY
PPOUT
PSEL
_CIACS1
R_W
CLKCIA
_INT6
_BHS
_RESETB
_STEP
DIR
_SIDE
_SEL0
_SEL1
_MTR
_LED
DTR
RTS
CD
CTS
DSR
R213
2k7
Q200
MMBT3904
R208
10k
R209
10k
D200
1N4148
RI
RS232 TRANSCEIVER
C233
0.1uF
U205
AZ75232G
_RxD
_TxD
C234
1000pF
C235
1000pF
C236
1000pF
SERIAL PORT
_TxD-OUT
_RxD-IN
RTS-OUT
CTS-IN
DSR-IN
CD-IN
DTR-OUT
RI
SERAUD
C240
22uF
AUDIN
D400
S1MWF-7
F2
4A
D201
S1MWF-7
AUDOUT
R214
1k
C237
22uF
AUDIOOUT
CN203B
Male_Top
U209E
74HCT08
C230
0.1uF
U203B
C231
0.1uF
SERIAL
Sheet: /Serial/
File: serial.kicad_sch
Title: AMIGA PCI
Size: B
Date: 2026-04-27
Rev: 7.0
KiCad E.D.A. 8.0.9
Id: 10/17

74LVC245 ENABLED FOR FIRST WORD DURING WRITES.
DATA ALWAYS FLOWS A->B.

74LVC373 LATCHES DATA FOR FIRST WORD DURING READS.

DATA BUFFERS

DURING WRITE CYCLES, ALL DATA IS REAL-TIME.
FOR THE FIRST WRITE COMMAND, D16..31 IS ENABLED.
FOR THE SECOND WRITE COMMAND, D0..15 IS ENABLED.

DURING READ CYCLES, D16..31 IS LATCHED
AFTER THE FIRST READ COMMAND FROM THE IDE DEVICE.
THE SECOND READ FROM THE ATA DEVICE DRIVES
D0..15 LIVE. THE DATA IS THEN LATCHED BY THE MC68040.

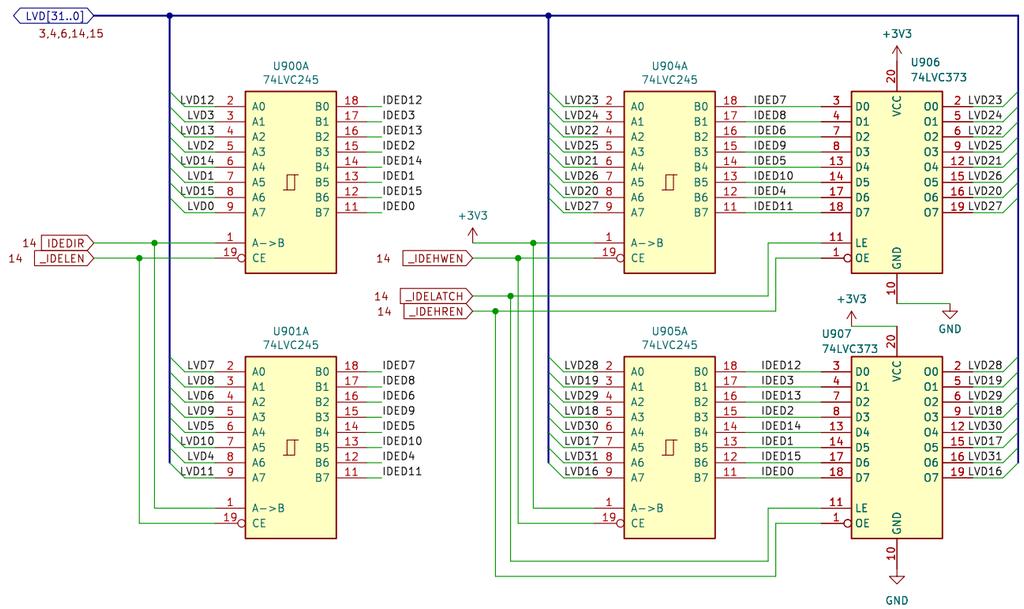

BUFFERS AND TERMINATION

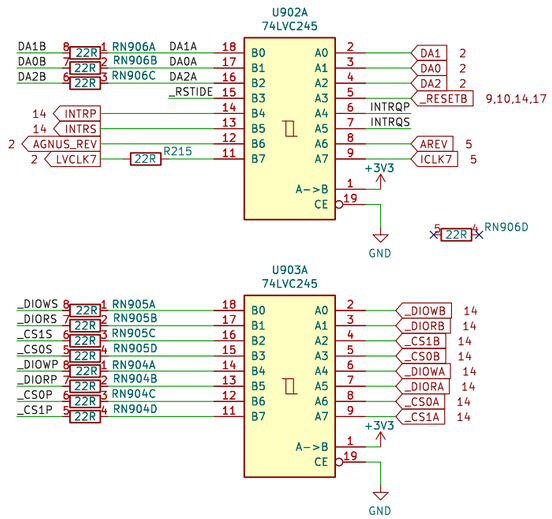

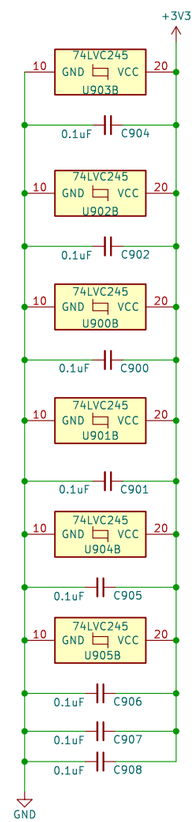

PORTS BYTE SWAPPED!

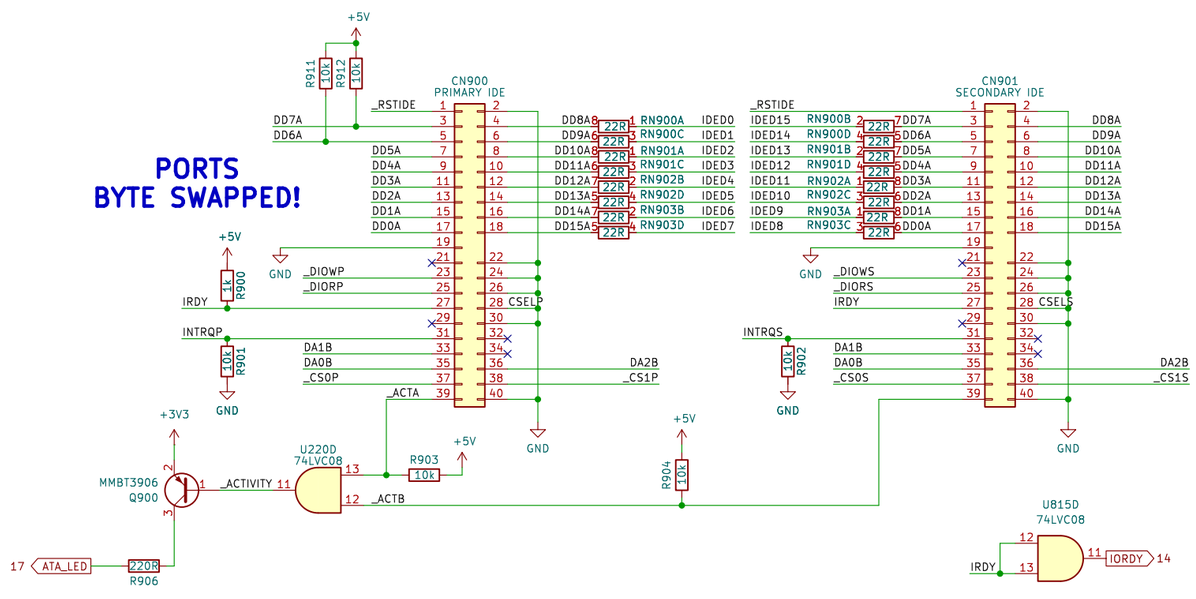

ATA INTERFACE

Sheet: /ATA Interface/
File: IDE.kicad_sch

Title: AMIGA PCI

Size: B	Date: 2026-04-27	Rev: 7.0
KiCad E.D.A. 8.0.9		Id: 11/17

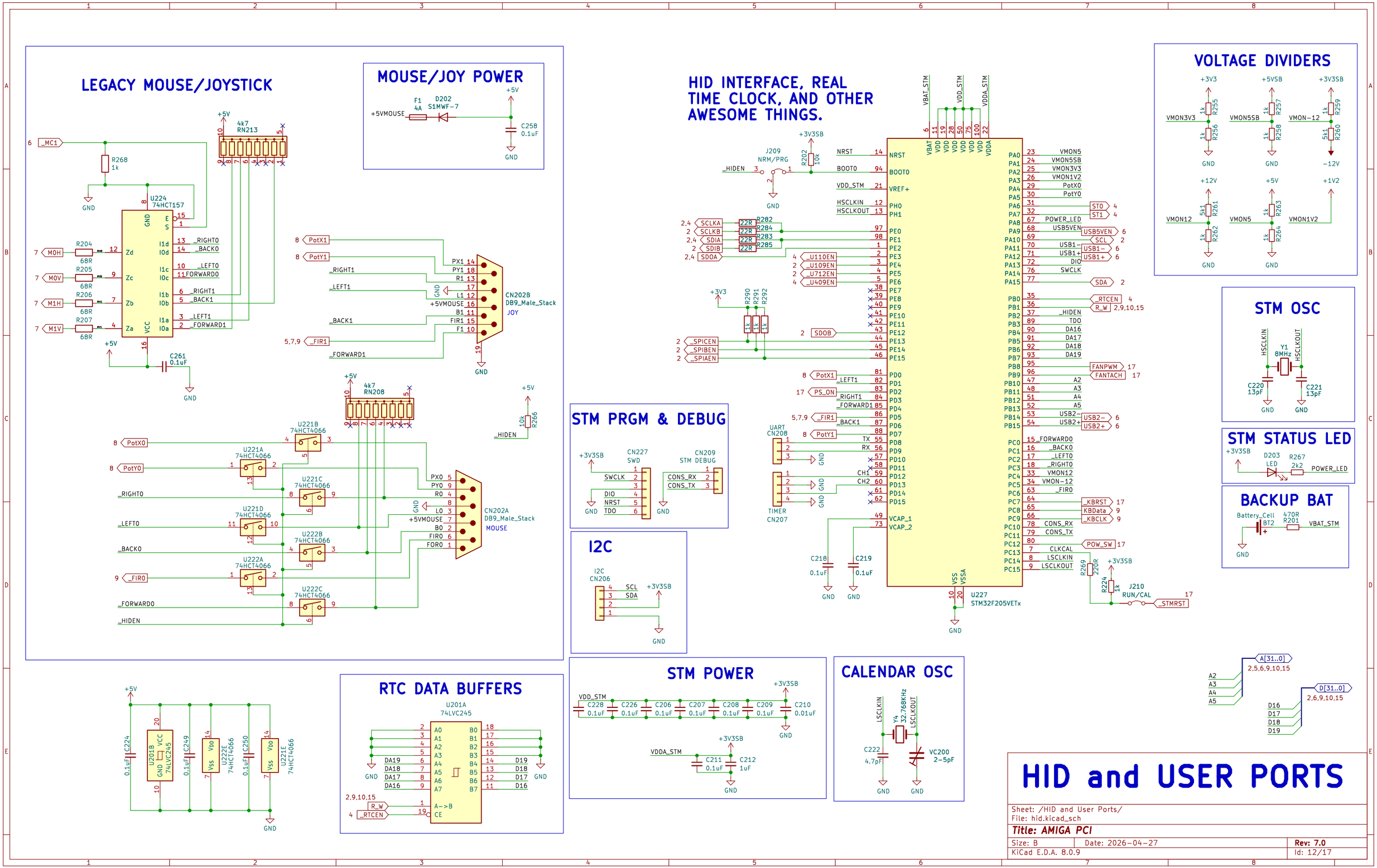

HID and USER PORTS

Sheet: /HID and User Ports/
File: hid.kicad_sch

Title: AMIGA PCI

Size: B	Date: 2026-04-27	Rev: 7.0
KiCad E.D.A. 8.0.9		Id: 12/17

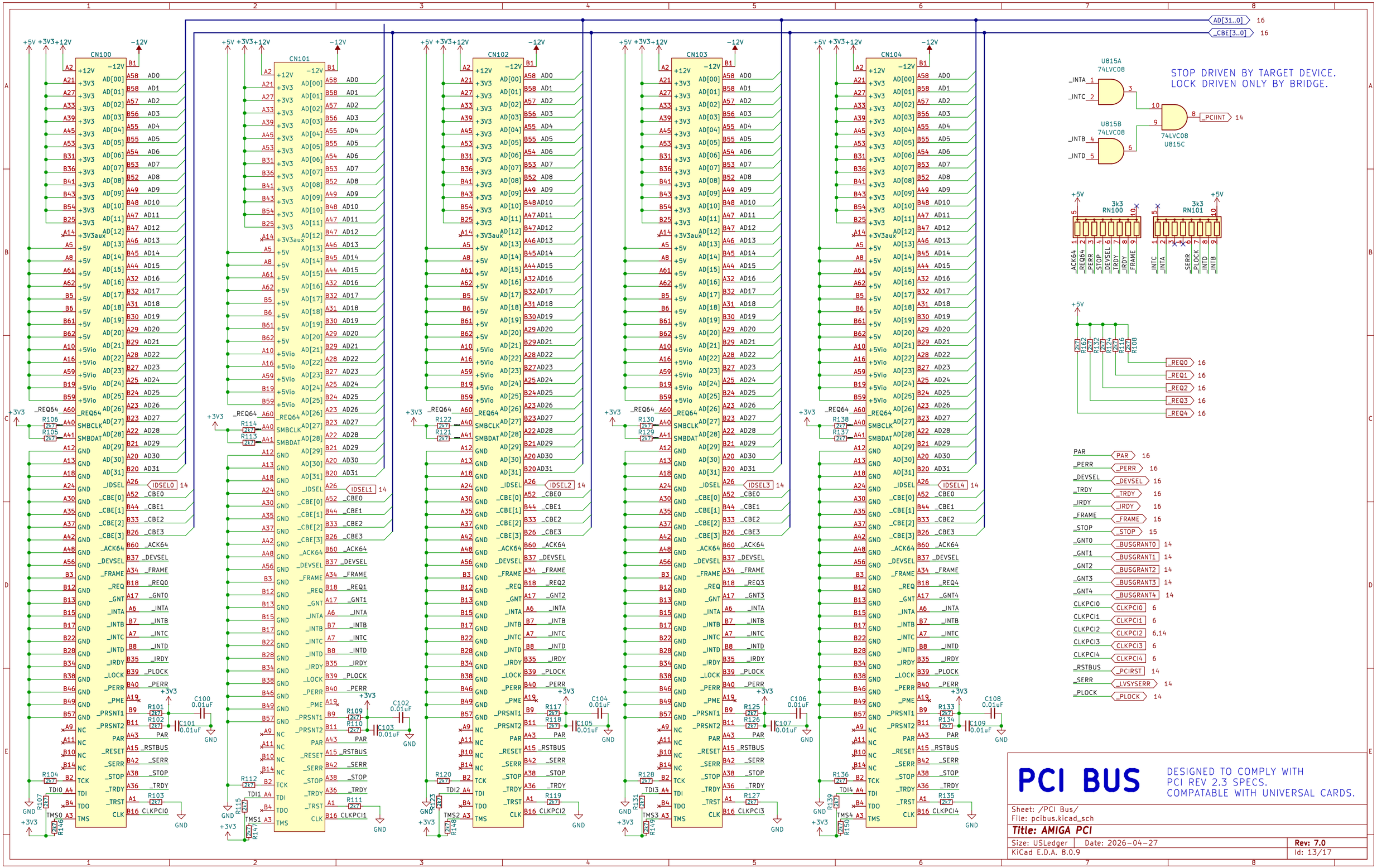
CN100
CN101
CN102
CN103
CN104
AD[31..0] 16
_CBE[3..0] 16
U815A
74LVC08
U815B
74LVC08
U815C
STOP DRIVEN BY TARGET DEVICE.
LOCK DRIVEN ONLY BY BRIDGE.
_PCIINT 14
RN100 3k3
RN101 3k3
_REQ0 16
_REQ1 16
_REQ2 16
_REQ3 16
_REQ4 16
PAR 16
_PERR 16
_DEVSEL 16
_TRDY 16
_IRDY 16
_FRAME 16
_STOP 15
_GNT0 14
_GNT1 14
_GNT2 14
_GNT3 14
_GNT4 14
CLKPCI0 6
CLKPCI1 6
CLKPCI2 6,14
CLKPCI3 6
CLKPCI4 6
_RSTBUS 14
_SERR 14
_PLOCK 14
PCI BUS
DESIGNED TO COMPLY WITH
PCI REV 2.3 SPECS.
COMPATABLE WITH UNIVERSAL CARDS.
Sheet: /PCI Bus/
File: pcibus.kicad_sch
Title: AMIGA PCI
Size: USLedger
Date: 2026-04-27
Rev: 7.0
KiCad E.D.A. 8.0.9
Id: 13/17

U109: BUFFERS AD/D/A BUSSES, AD PARITY CALC, BRIDGE REGISTERS

U110: BUS ARBITOR, INTERRUPT HANDLING, PARITY ERROR DETECTION, ATA CONTROLLER

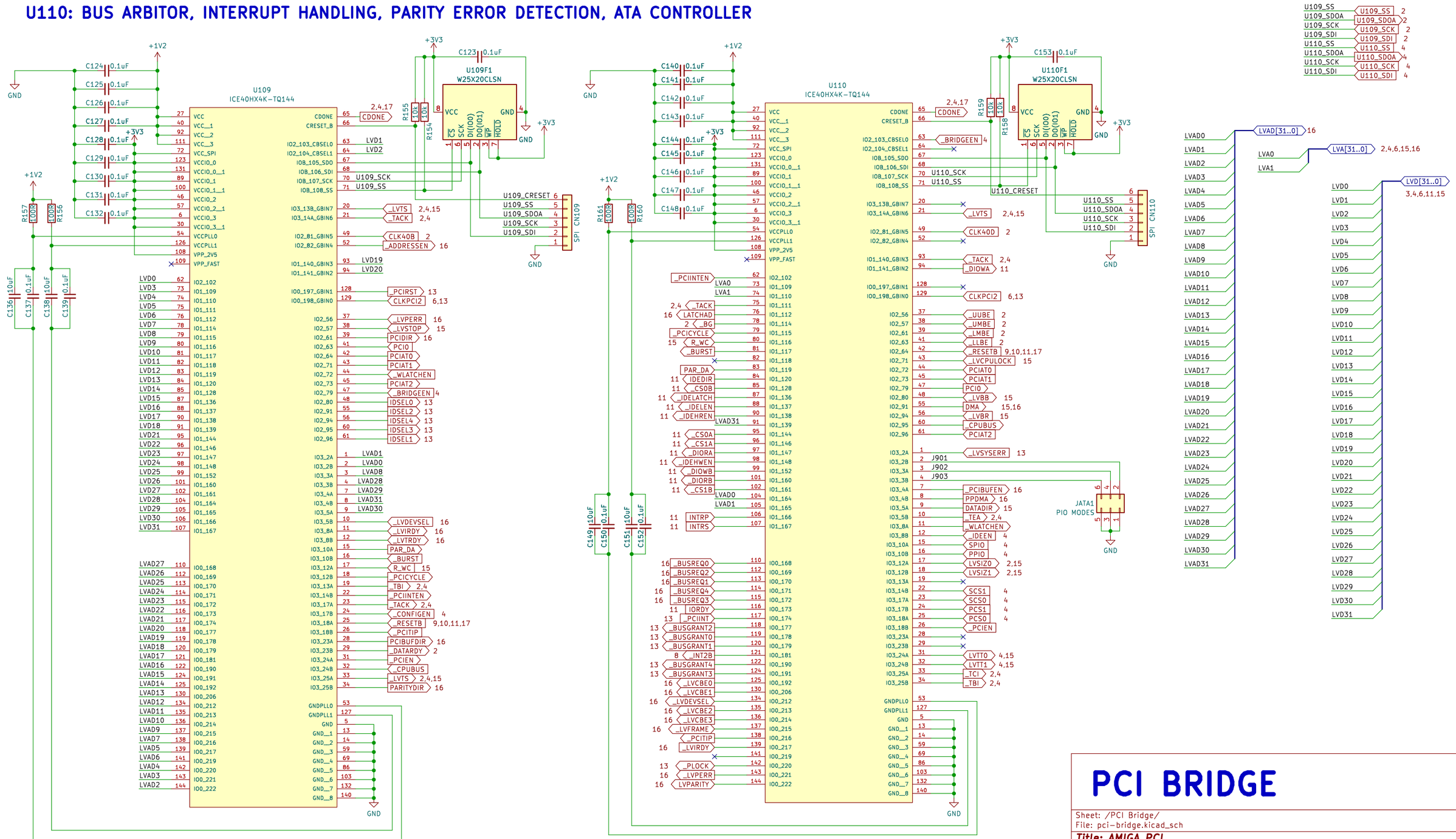

PCI BRIDGE

Sheet: /PCI Bridge/
File: pci-bridge.kicad_sch

Title: AMIGA PCI

Size: B	Date: 2026-04-27	Rev: 7.0
KiCad E.D.A. 8.0.9		Id: 14/17

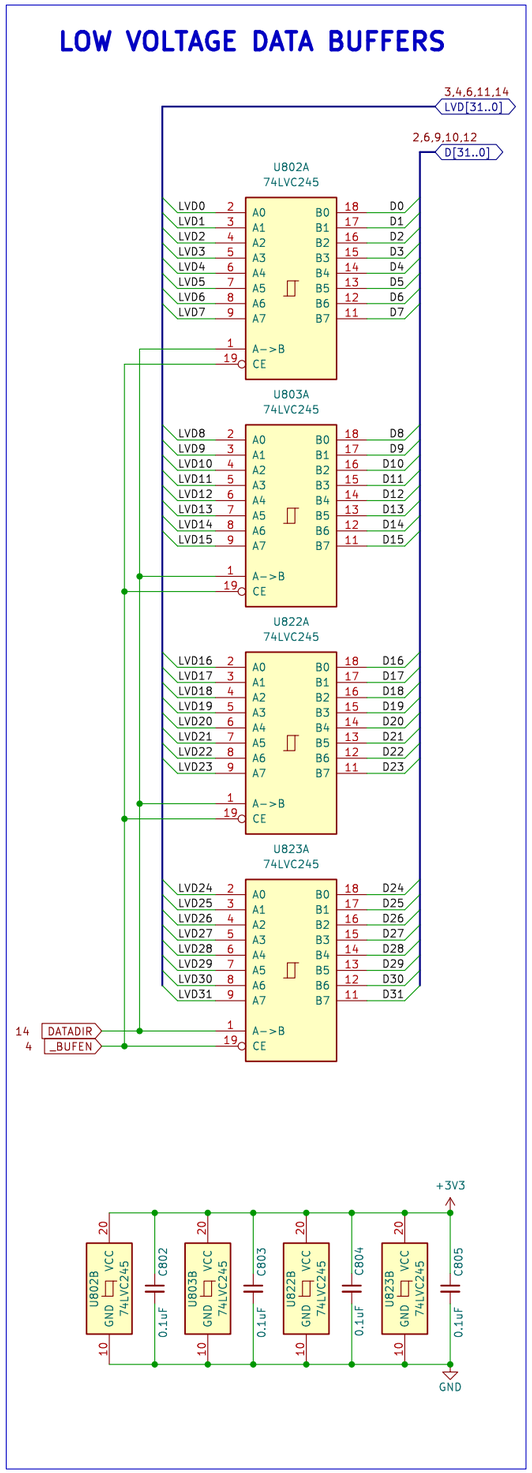

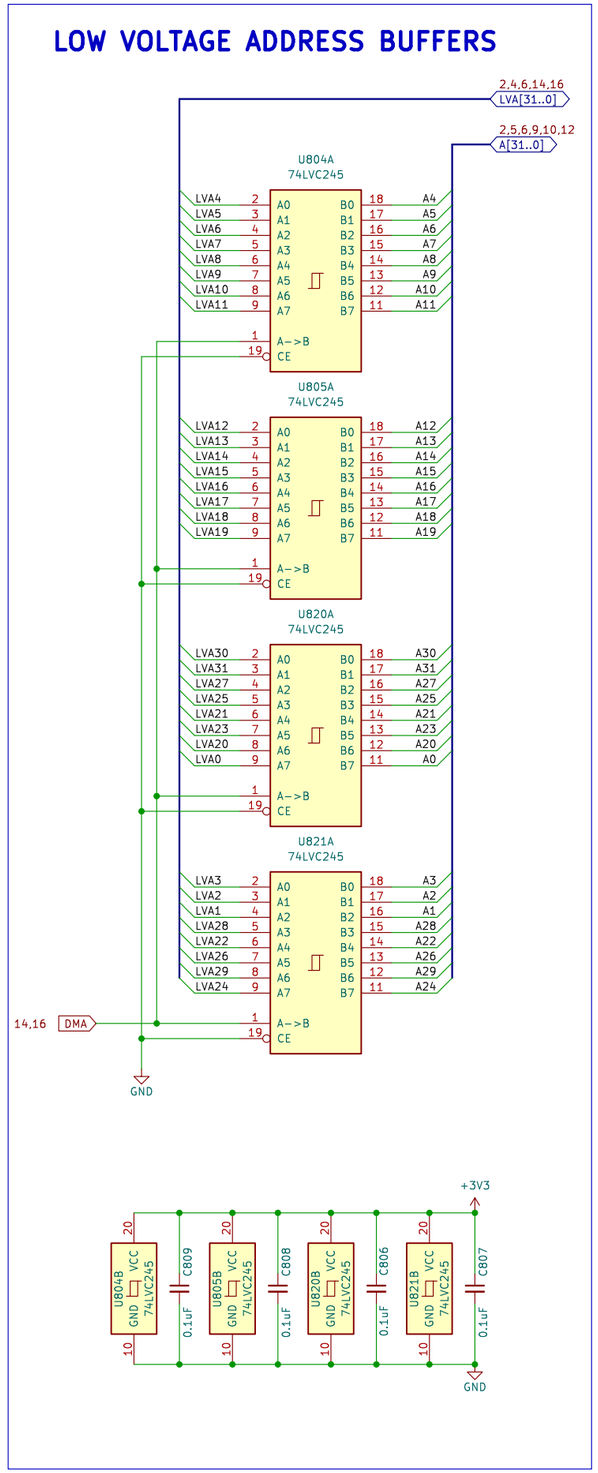

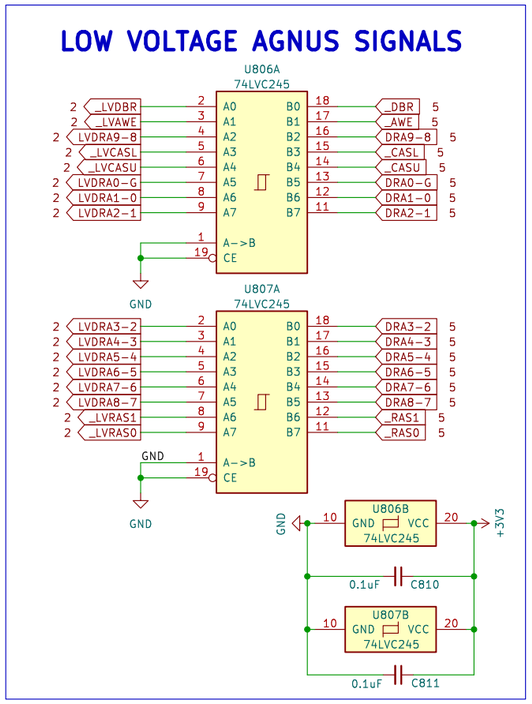

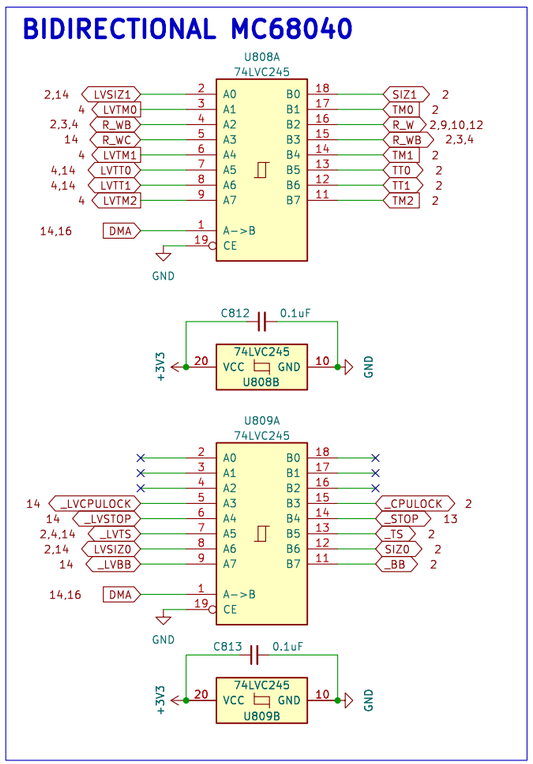

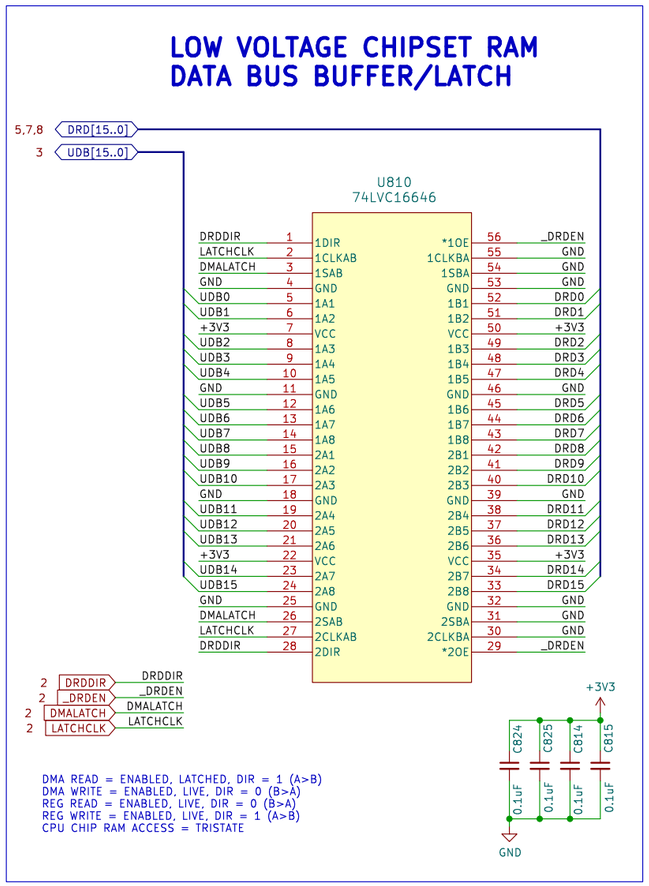

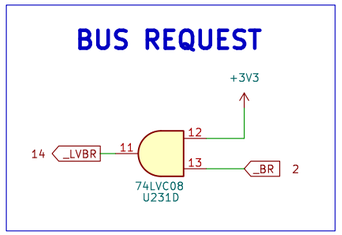

MOTOROLA BUS LOGIC

Sheet: /Motorola Bus Logic/
File: motorola_bus_logic.kicad_sch

Title: AMIGA PCI

Size: B	Date: 2026-04-27	Rev: 7.0
KiCad E.D.A. 8.0.9		Id: 15/17

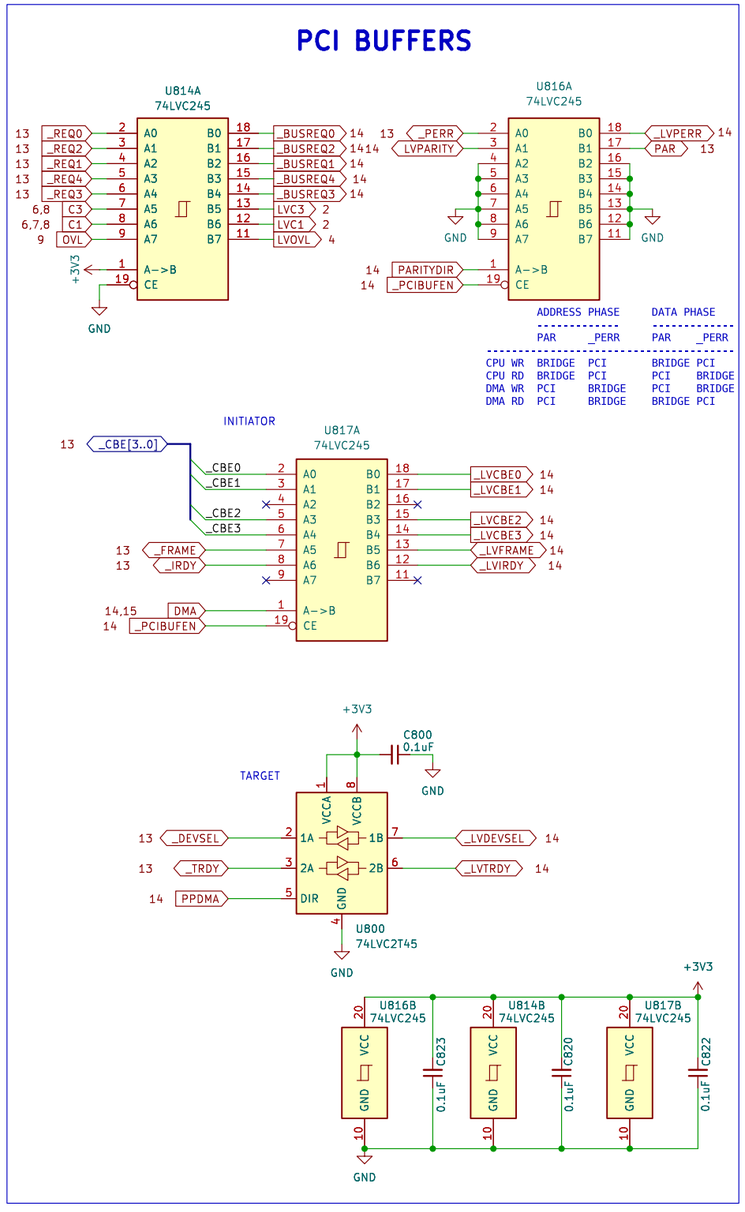

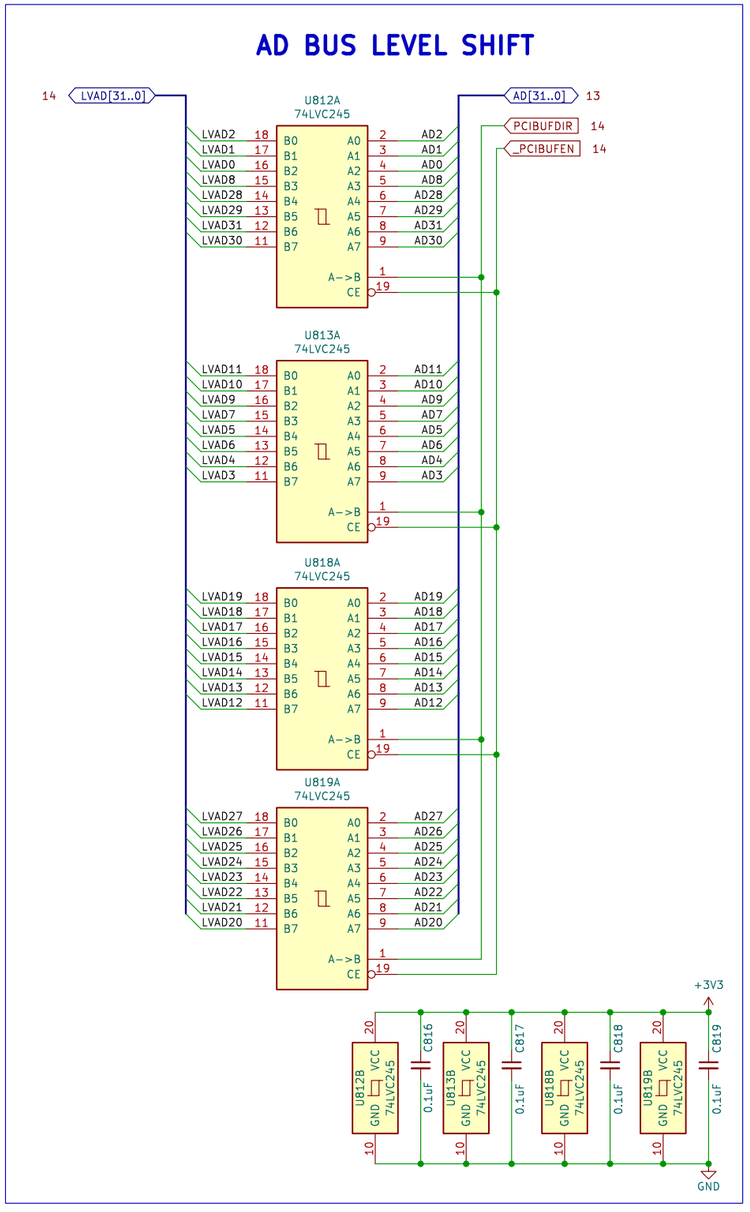

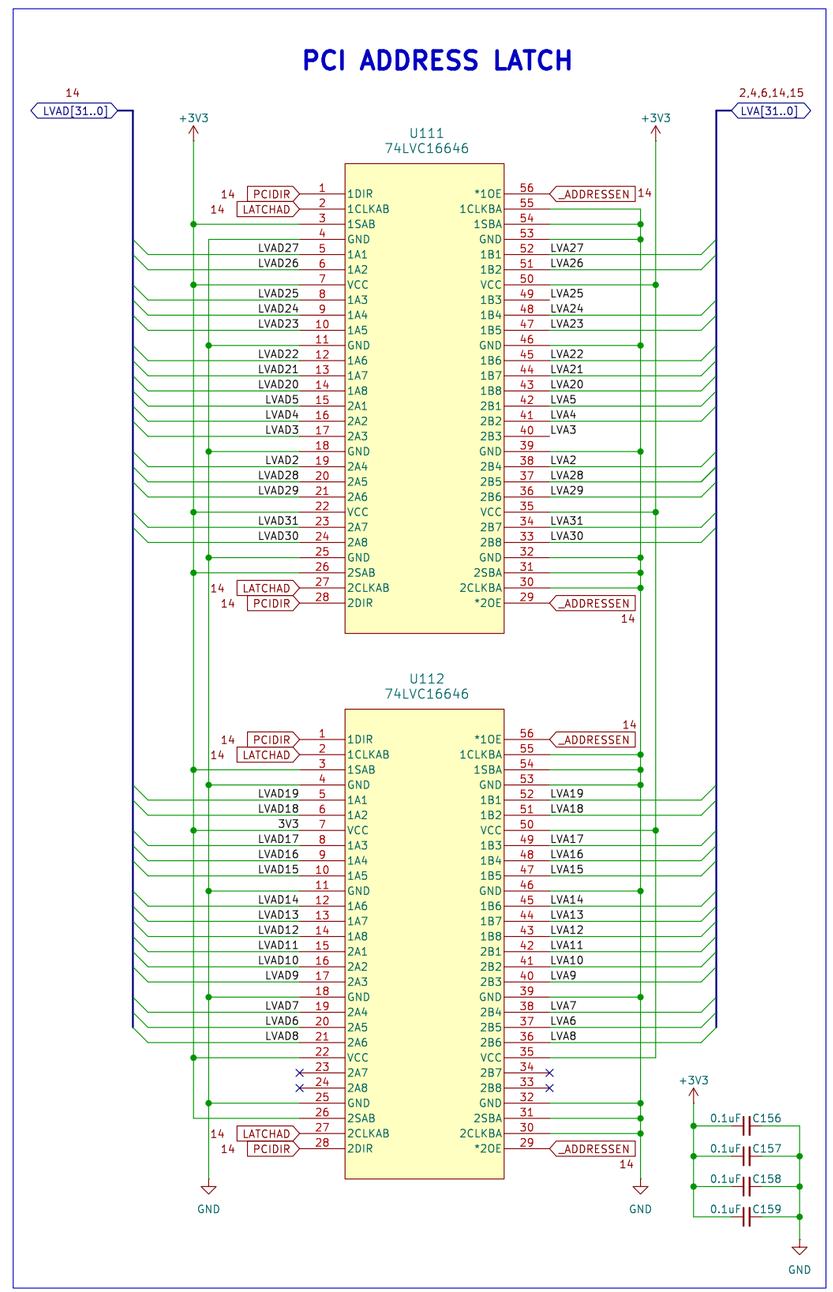

PCI BUS LOGIC

Sheet: /PCI Bus Logic/
File: pci_bus_logic.kicad_sch

Title:

Size: B	Date: 2026-04-27	Rev: 7.0
KiCad E.D.A. 8.0.9		Id: 16/17

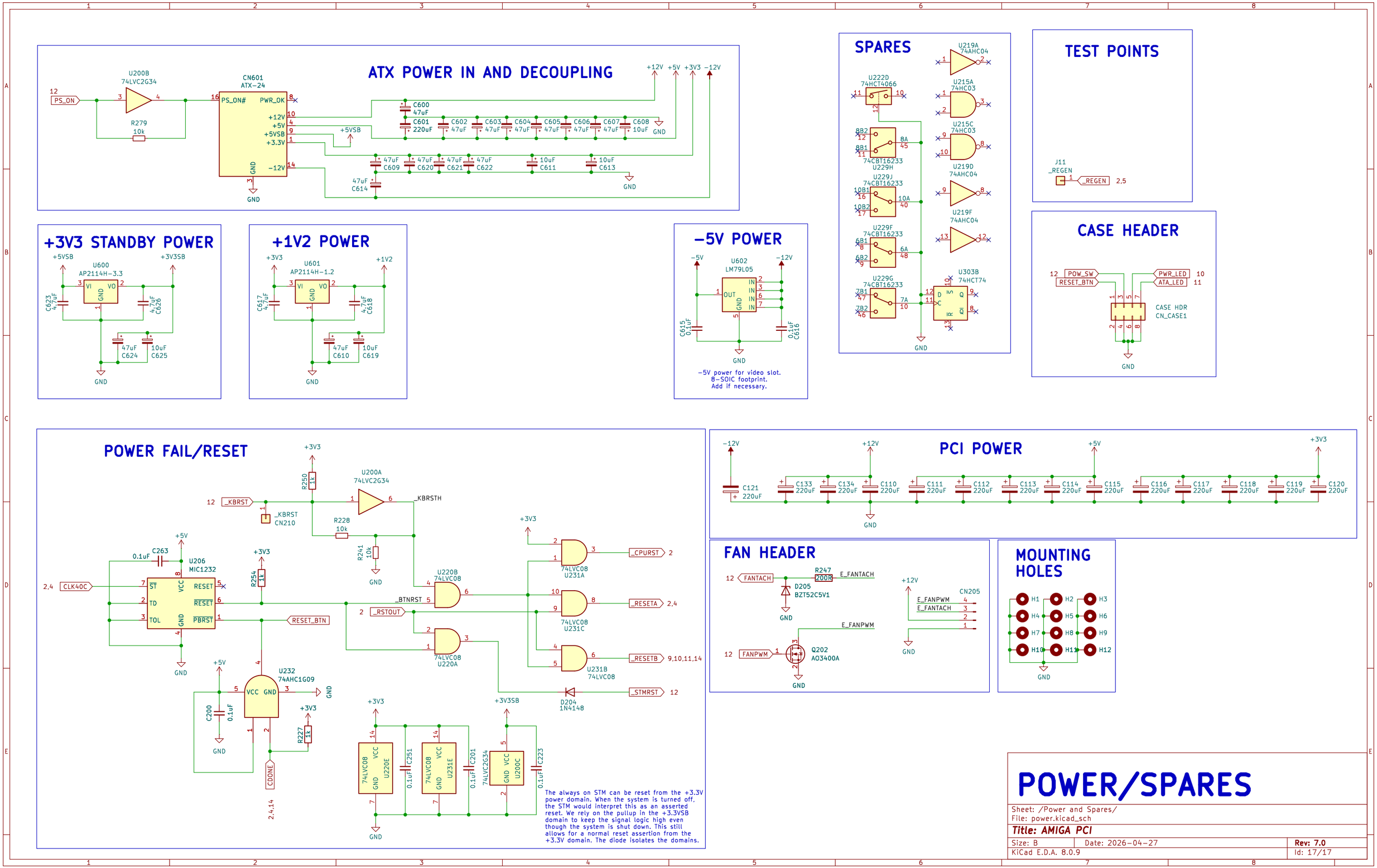

POWER/SPARES

Sheet: /Power and Spares/
File: power.kicad_sch

Title: AMIGA PCI

Size: B	Date: 2026-04-27	Rev: 7.0
KiCad E.D.A. 8.0.9		Id: 17/17